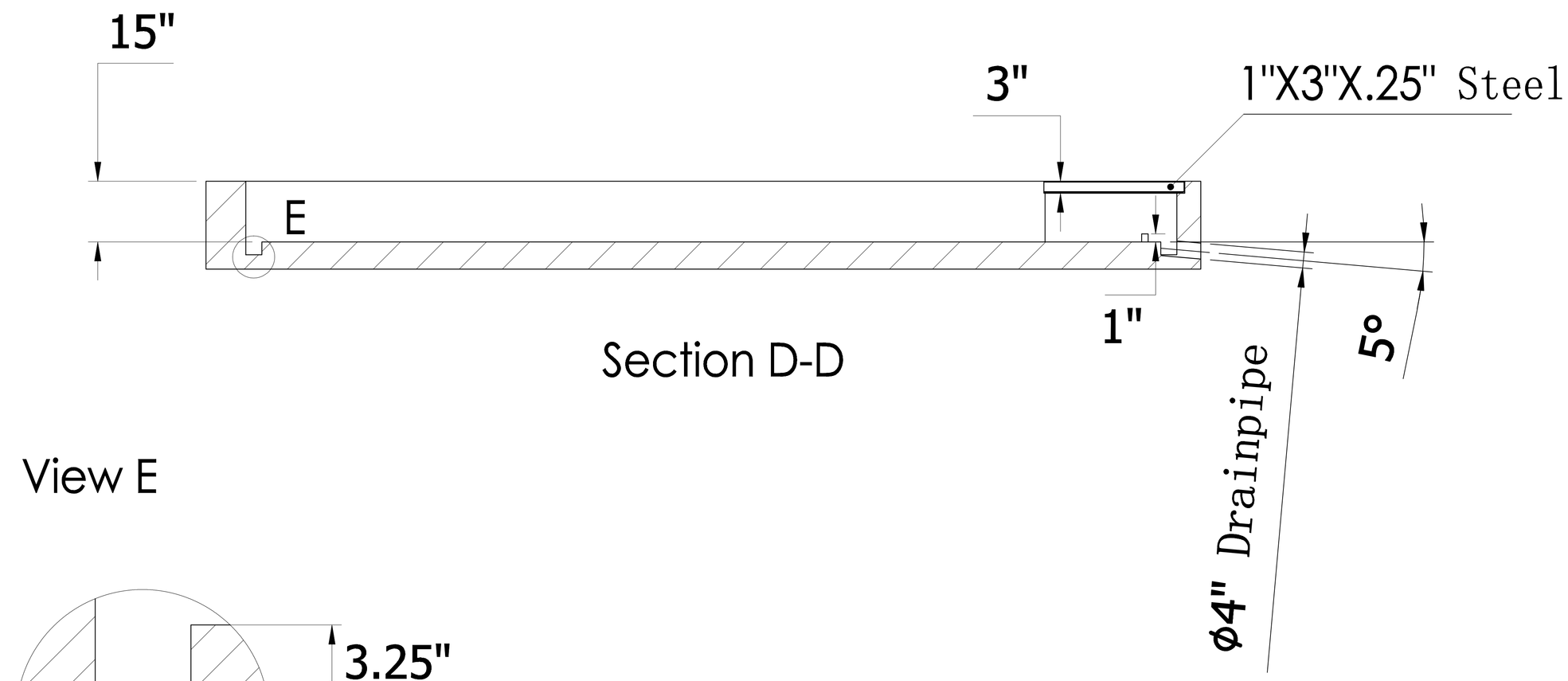

Section D-D

View E

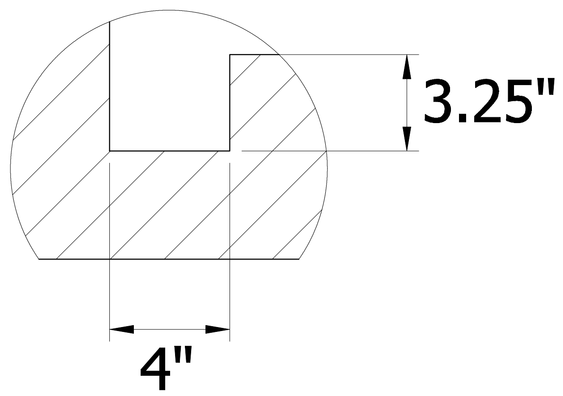

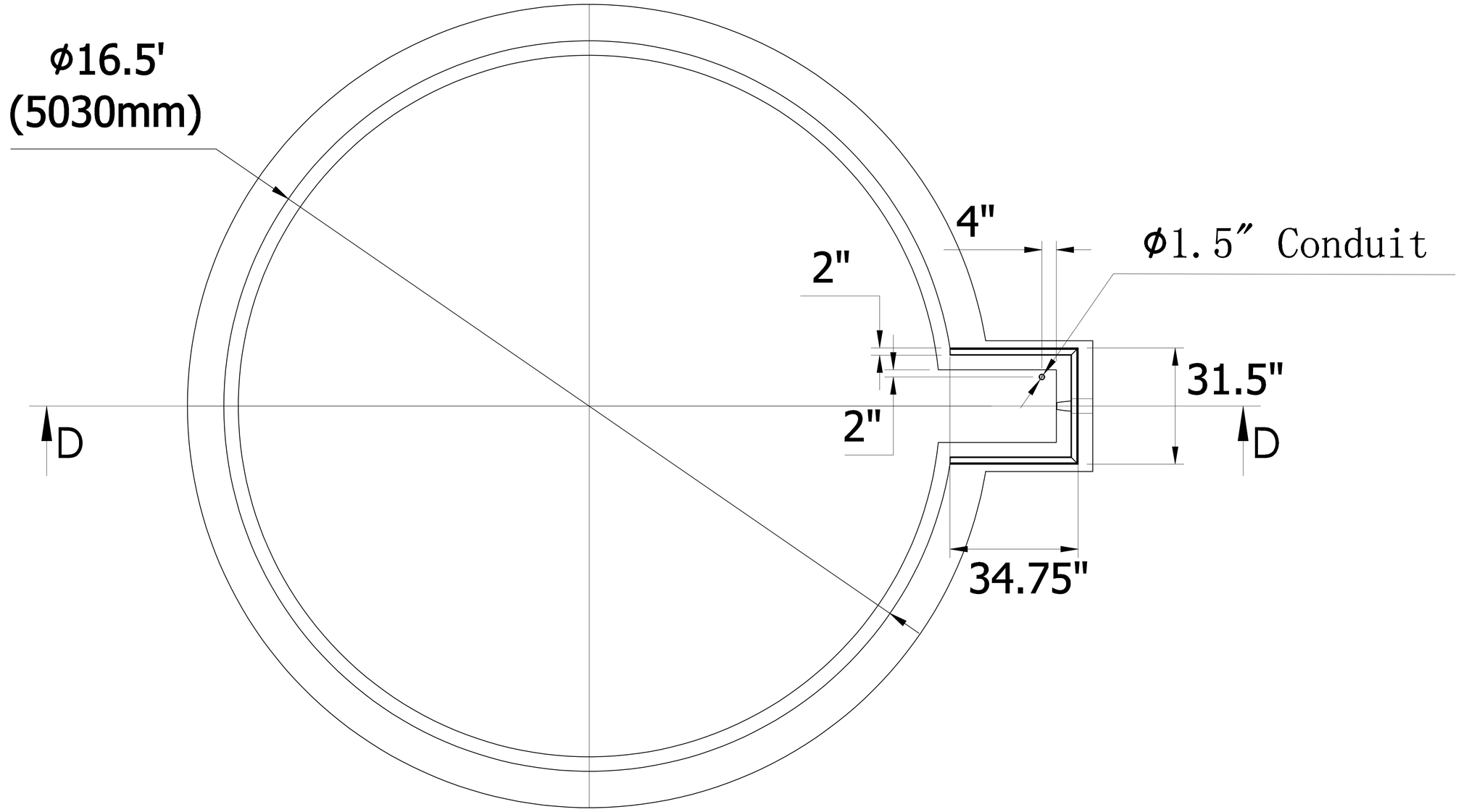

CarouselUSA
2135 Huntington Drive,
Suite 101
San Marino, California
91108
Tel: (626) 318-3195
Toll Free: (866) 796-5975
Fax: (626) 282 1201

REVISIONS

DRAWN	SS
CHECK	SS
APPROVED	JT
DATE	03/13/2008
PROJECT	XXXXXXXXXXXX

MODEL 50C
Pit Specifications

M-50C

ALL IDEAS, DESIGN ARRANGEMENTS AND PLANS INDICATED OR REPRESENTED BY THIS DRAWING ARE OWNED BY AND THE PROPERTY OF CAROUSEL USA AND WERE CREATED, EVOLVED, AND DEVELOPED FOR USE ON AND IN CONNECTION WITH THE SPECIFIED PROJECT. NONE OF SUCH IDEAS ARRANGEMENTS OR PLANS SHALL BE USED BY OR DISCLOSED TO ANY PERSON FIRM OR CORPORATION FOR ANY PURPOSE WHATSOEVER WITHOUT THE WRITTEN PERMISSION OF CAROUSEL USA.